Beaumont Manufacturing
and Distribution Company
www.beaumontmanufacturing.com

CH10, CH20, CH30 CHAMBERS

BMD's CH10, CH20 and CH30 chambers are designed to be used with the series LC10 liquid level controller, but may also be used with other types of level switches and controllers. BMD offers two sizes of horizontal chambers, the CH10 and CH20 as well as a full line of vertical chambers (CH30). The upper dome portion of the CH30, vertical chamber can also be ordered separately for top entry into a vessel.

Chambers offer the benefit of isolating the process fluid from the turbulence of the main vessel making for a more accurate level measurement. They are also an excellent choice for situations where the main vessel's internal geometry may block the direct installation of a level controller. BMD's CH30 vertical chambers are fully customizable to meet many process piping sizes and connections.

Specifications

CH10 and CH20

Sizes:
- Controller Connection: 2" NPT
- Process Connection: 1" NPT

Pressure Rating:
- 2000 psi

Materials:
- Carbon Steel or Stainless (Optional)

CH30

Sizes:
- Chamber: 3" and 4"
- Controller Connection: 2" NPT or Flanged
- Process Connection: 1", 1 1/2" and 2"

Pressure Rating:
- Flanged: Up to 1500 Class
- Threaded: 600 Class Standard, Higher Rating Available by Request.

Materials:
- Carbon Steel or Stainless (Optional)

CH20

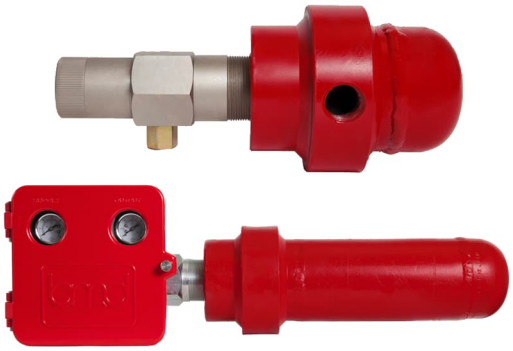

CH10

CH30

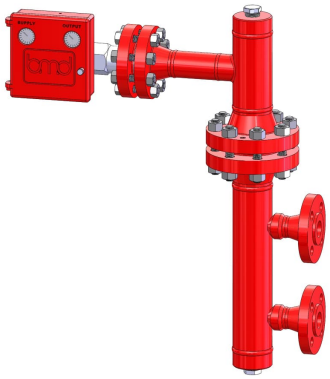

CH30 (Dome Only)

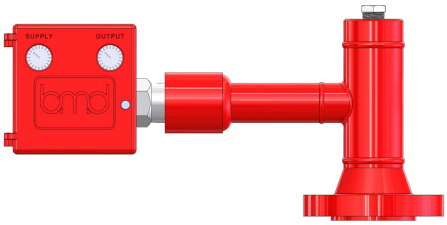

How to Order

Example Model No. CH10-C
CH10 Series Horizontal Chamber, Carbon Steel, 2" NPT Controller Connection, 1" NPT Process Connection.

CH10	CH20
CH10-C - Carbon Steel	CH20-C - Carbon Steel
CH10-T - Stainless Steel	CH20-T - Stainless Steel

Level controllers sold separately.

Dimensions

CH10

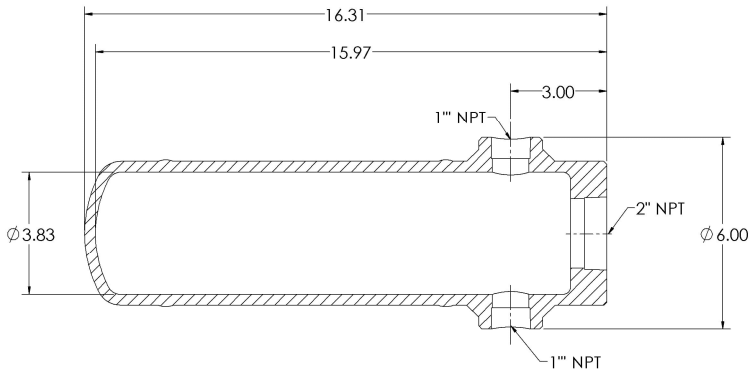

CH20

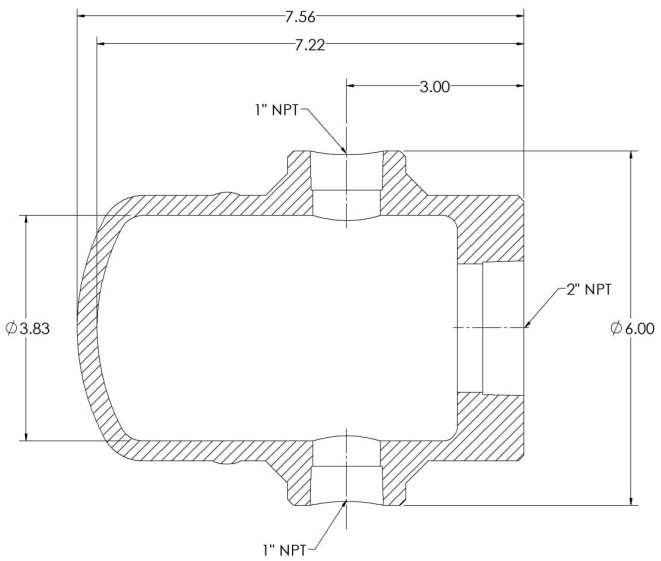

CH30 (NPT Dome Only)

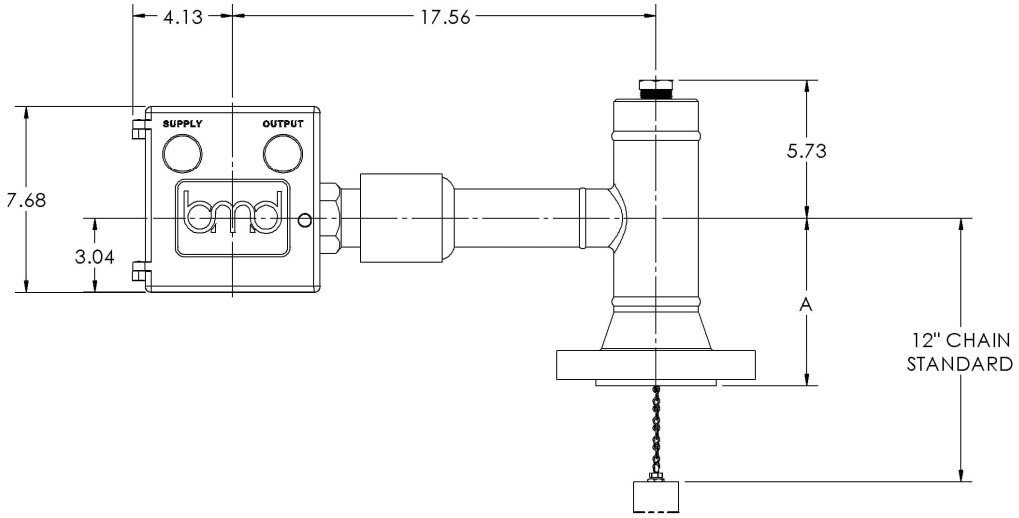

CH30 (Flanged Dome Only)

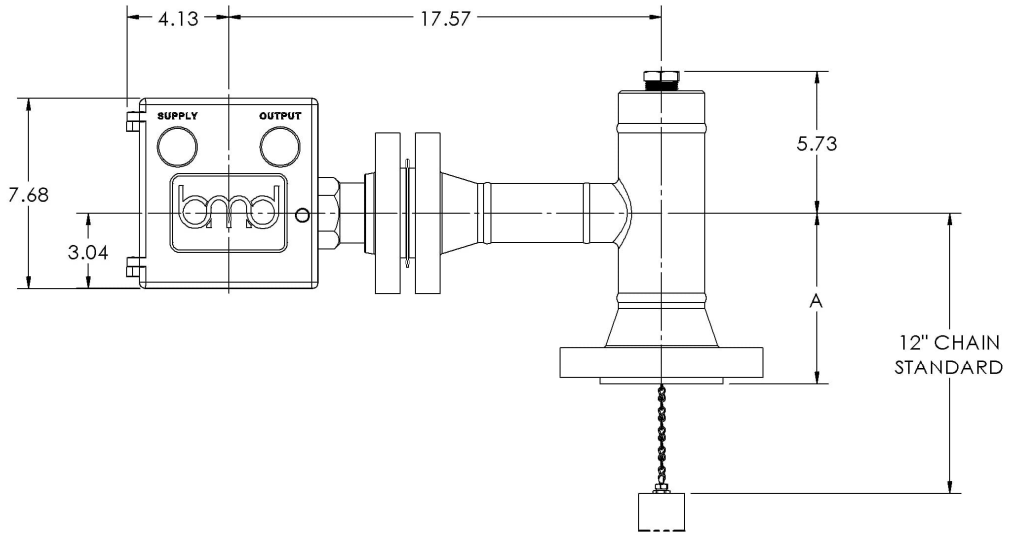

Dimension A		
Flange Class	Dome Size	
	3"	4"
150 RF	6.19	7.19
300 RF	6.56	7.56
600 RF	6.93	8.44
600 RTJ	7.00	8.50
900 RF	7.69	8.94
900 RTJ	7.75	9.00
1500 RF	8.31	9.31
1500 RTJ	8.38	9.38
2500 RF	10.31	11.69
2500 RTJ	10.37	11.75

CH30 Dimensions

Threaded Level Controller with Threaded Vessel Connection

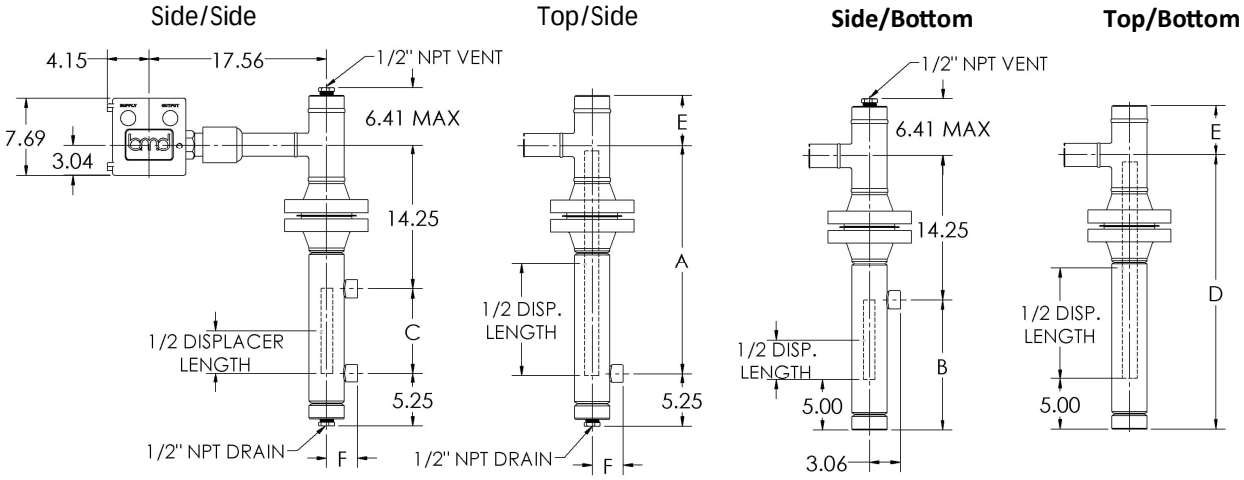

Flanged Level Controller with Flanged Vessel Connection

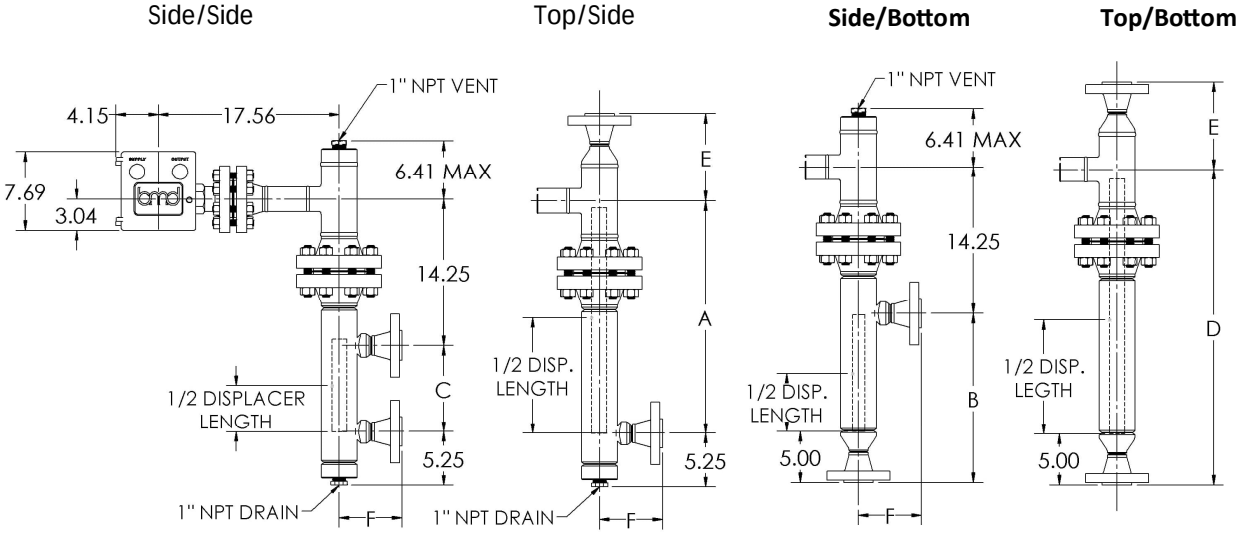

Threaded Level Controller with Flanged Vessel Connection

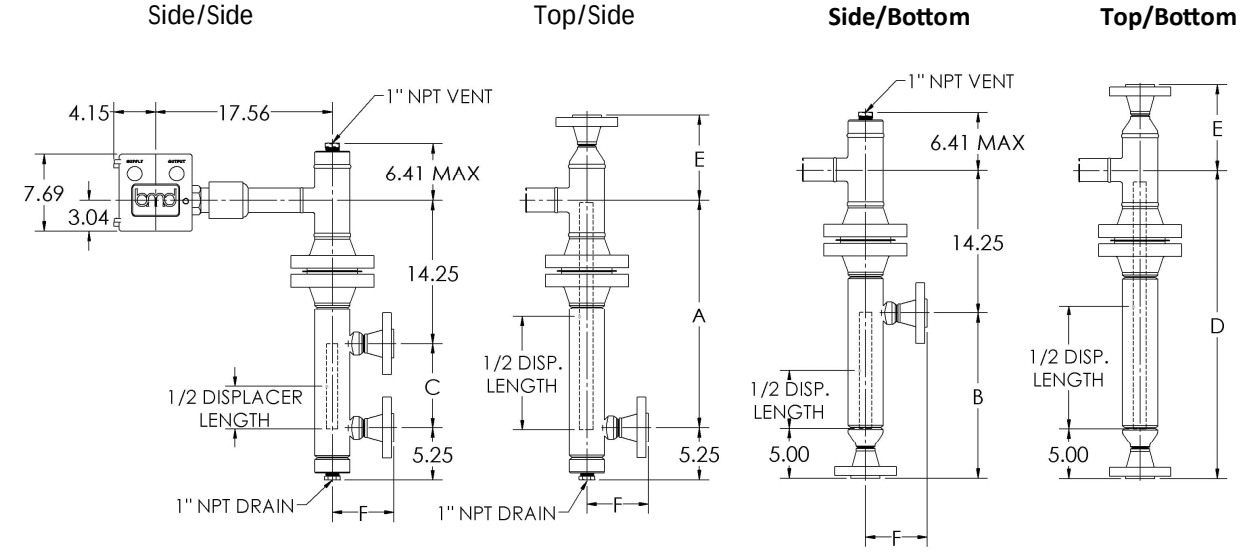

(Flanged Level Controller with Threaded Vessel Connection also available.)

CH30 Dimensions (continued)

Chamber Size	Vessel Connection			Dimension	
	Type	Size	Rating	E	F
3"	NPT	1"	ALL	4.91"	3.12"
		1 1/2"			3.19"
		2"			3.31"
4"		1"		5.72"	3.62"
		1 1/2"			3.69"
		2"			3.81"
3"	Flanged	1"	150#	7.10"	Consult Factory
			300#	7.35"	
			600#	7.60"	
		1 1/2"	150#	7.35"	5.62"
			300#	7.60"	5.88"
			600#	7.91"	6.19"
		2"	150#	7.41"	5.88"
			300#	7.66"	6.12"
			600#	8.04"	6.5"
4"		1"	150#	7.91"	Consult Factory
			300#	8.16"	
			600#	8.41"	
		1 1/2"	150#	8.16"	6.12"
			300#	8.41"	6.38"
			600#	8.72"	6.69"
		2"	150#	8.22"	6.38"
			300#	8.47"	6.62"
			600#	8.85"	7"

Dimension	Chamber Style	Displacer Length	Dimension
C	Side-Side	14"	14"
		32"	32"
A	Top-Side	14"	15"
		32"	33"
B	Side-Bottom	14"	18"
		32"	36"
D	Top-Bottom	14"	20"
		32"	38"

Orientation Chart

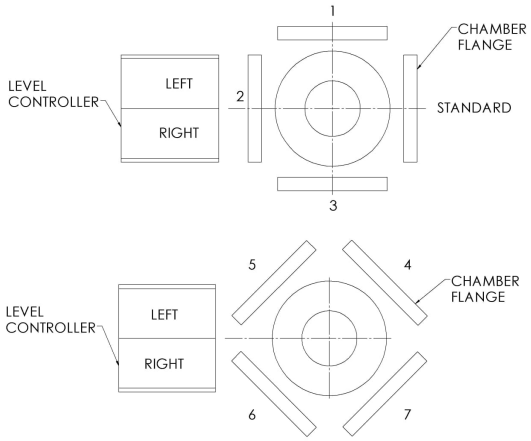

How to Order

Example Model No. CH30-3N30FC1-10N14DD1

CH30 Series Chamber, 3" Chamber, 2" NPT Level Control Connection, 3" 300 Class RF Flange, Carbon Steel Chamber, A193 B7 Bolts with Stainless-Grafoil Gaskets, 1" NPT Vessel Connections, 14" Displacer Length, Side/Side Chamber Style, Standard Orientation.

To order dome only stop here.

CH30-3 N 30 F C 1 - 10 N 14 DD 1

Dome only

Chamber Size
2 - 2" (Dome Only) 3 - 3" 4 - 4"

Level Control Connection
N - 2" NPT L.C. Connection F - 2" Flanged L.C. Connection

Flange Class
10 - 150 60 - 600 15 - 1500
30 - 300 90 - 900 25 - 2500 (Dome Only)

Flange Type
F - RF Flange J - RTJ Flange

Chamber Material
C - Carbon Steel N - Carbon Steel NACE T - Stainless Steel

Bolts/Gaskets
1 - A193 B7/Stainless-Grafoil 2 - A193 B7/Inconel-Grafoil (NACE) 3 - A194 B8M/Stainless-Grafoil 4 - A194 B8M/Inconel-Grafoil (NACE)

Vessel Connection Size
10 - 1" 15 - 1.5" 20 - 2"

Vessel Connection Type
N - NPT F - RF Flange J - RTJ Flange

Displacer Length
14 - 14" 32 - 32" Length - Other

Chamber Style
DD - Side/Side DB - Side/Bottom TD - Top/Side TB - Top/Bottom

Orientation (See Chart)
Blank - Standard 2 4 6 8
1 3 5 7 9

Consult factory for custom options.

NOTE:
Level control arm must be 16.44" for proper alignment with CH30.
Level control arm must be 7.75" for proper alignment with CH10.

Beaumont Manufacturing and Distribution Company
www.beaumontmanufacturing.com
Phone: 409-225-5863
Fax: 409-242-1005
850 Fannin
Beaumont, Texas 77701